longitudinal section M 1:50

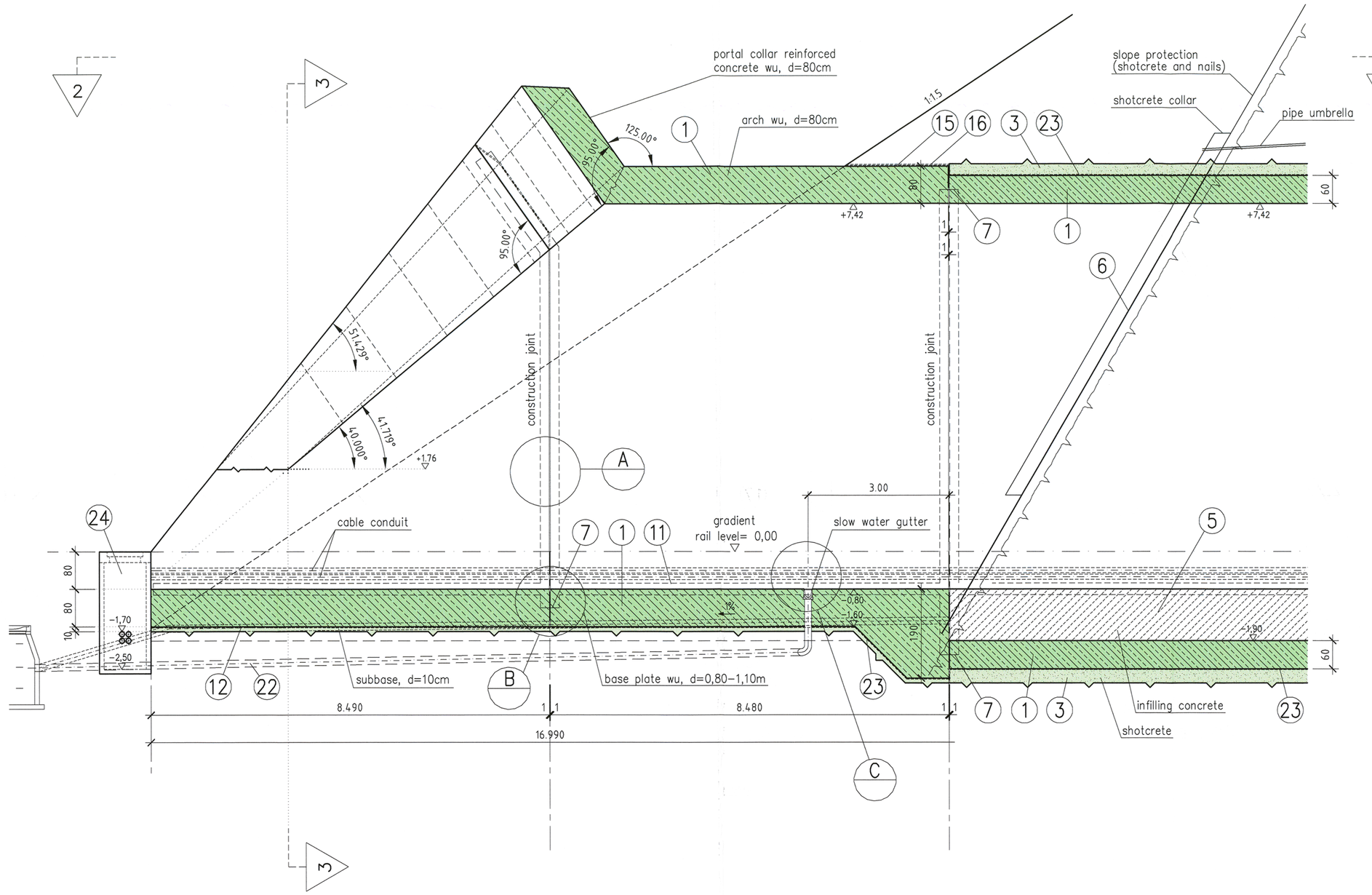

section M 1:50

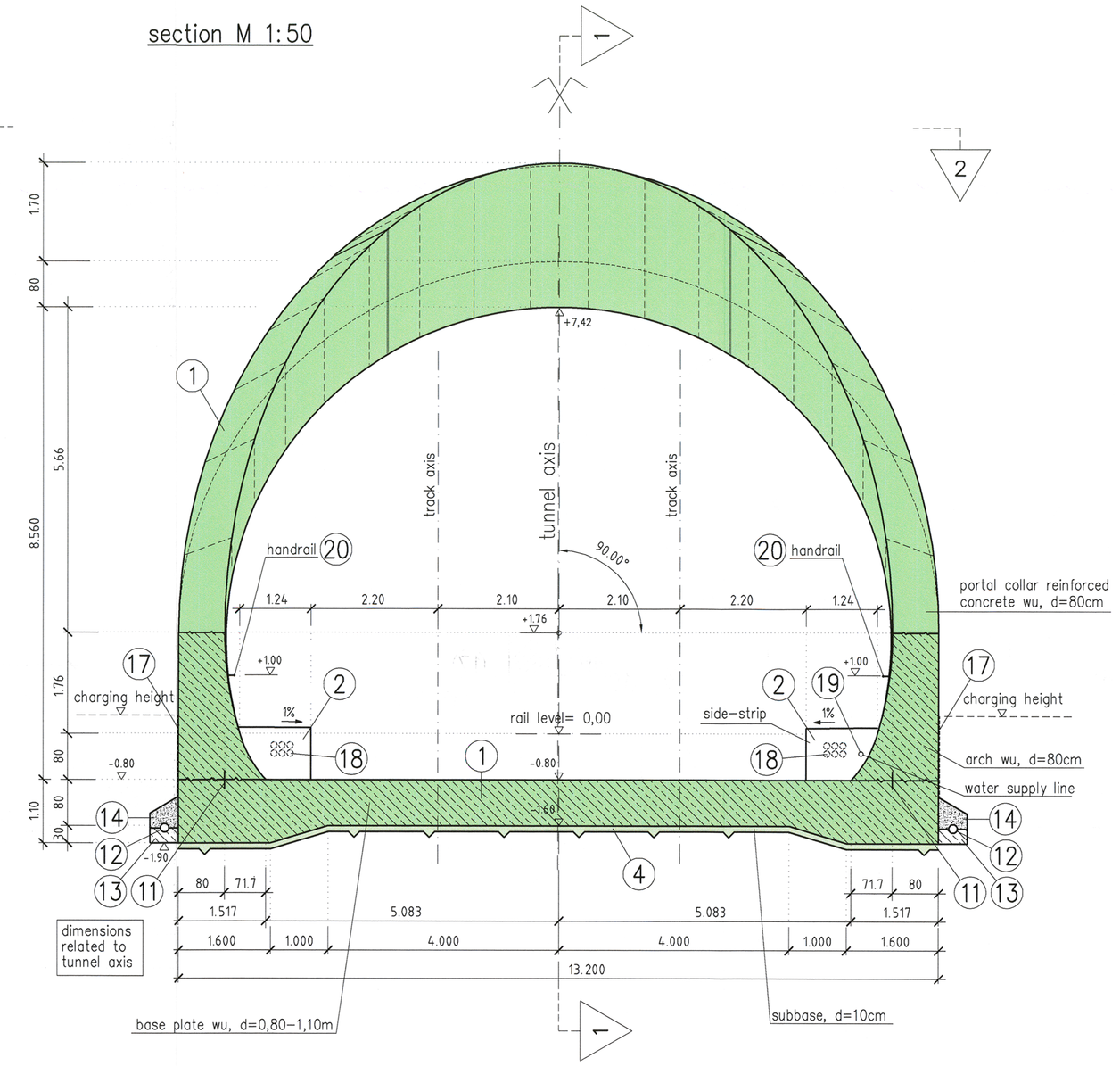

Massstab 1 : 50 — 0 1 2 3 4 5m

Massstab 1 : 25 — 0 1 2 3m

Massstab 1 : 10 — 0 0.5m 1m

Legend:

1. watertight (wu) reinforced conrete for base plate, arch, portal collar, class C30/37; XC4, XF2, XA1, structural steel BST 500S/M
2. concrete for side-strip, class C25/30; XC3, XF2, XA1, structural steel BST 500S/M
3. shotcrete, class C25/30; XF1, structural steel BST 500S/M
4. subbase, class C12/15; X0
5. infilling concrete, class C25/30; XC2, XF2, XA1
6. shotcrete shell made of reinforced concrete, class C25/30; XF1, structural steel BST 500S/M
7. waterstop FMS 400 with steel plates
8. capping joint FVK 1073
9. joint filler, mineral fibre mat 20 mm
10. injection tubes
11. steel tagger 300 x 2 mm
12. drainage pipe PEHD DN 150, slotted (120°)
13. drain foundation, plain concrete C16/20
14. draining gravel, sort 7/31
15. welded bitumen shett, 2 layers
16. protective concrete, reinforced, C25/30, d=6 cm
17. bituminous paint, 2 layers
18. pipes for cables, PEHD, DN 110
19. water supply line, PEHD, DN 80 (fire line)
20. handrail
21. slow water gutter with cast iron cover
22. liner drainage DN 150
23. plastic sheet
24. cable shaft 1,10 x 1,00 m

top view M 1:50

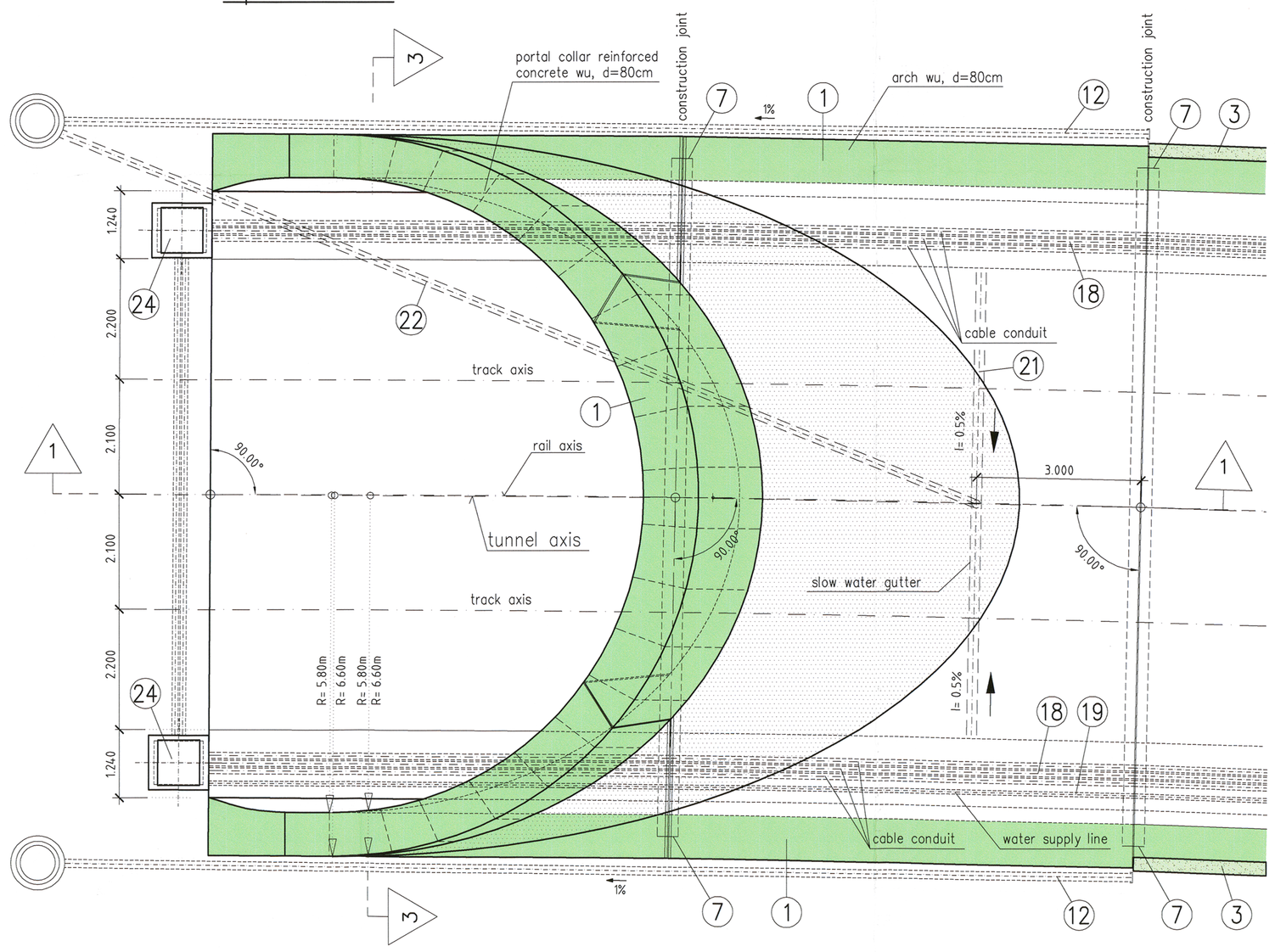

detail "A" M 1:10

design construction joint arch
open building method

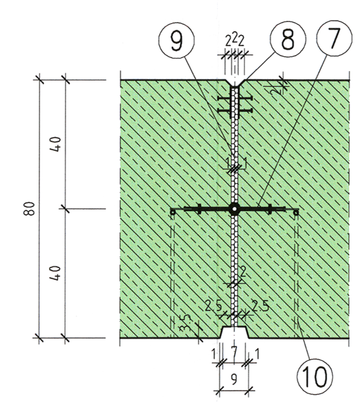

detail "B" M 1:10

design construction joint base plate
open building method

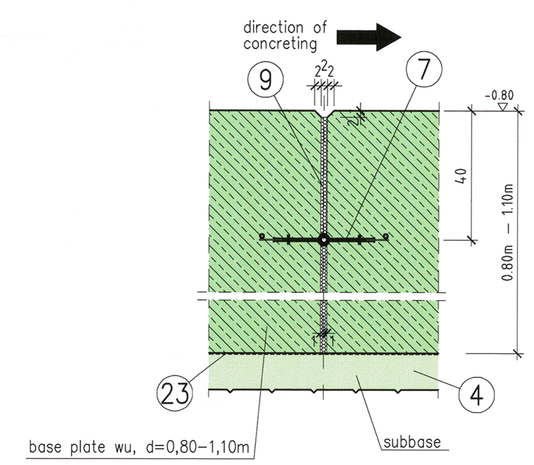

detail "C" M 1:25

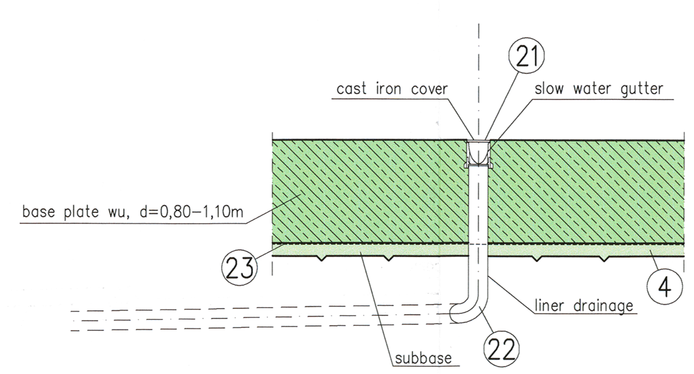

REV.	DATE	NAME	KIND OF CHANGE

Verificator / Expert Checker / Expert	Cerinta Requirement	Semnatura Signature	Referat / Expertiza Report / Expertise

European Investment Bank

MINISTERUL TRANSPORTURILOR

BENEFICIAR / BENEFICIARY: CFR

COMPANIA NAȚIONALĂ DE CĂI FERATE "CFR" SA

PROIECTANT / DESIGNER: PÖYRY

			Data Date	Semnatura Signature
Aprobat Approved	Șef de echipa Team leader	C. Teodorescu	06/2013	
Verificat Checked	Expert Cheie Key Expert	M. Diegmann	06/2013	
Aprobat Approved	Adjunct Șef de echipa Deputy Team leader	J. Werfling	06/2013	
Proiectat Designed	Inginer Engineer	D. Ciotamel	06/2013	

"Reabilitarea liniei c.f. Frontieră - Curtici - Simeria, parte componentă a coridorului IV Pan - European pentru circulația trenurilor cu viteză maximă de 160 km/h"
Tronsonul 2: km 614-Gurasada
"Rehabilitation of the Railway Line Border - Curtici - Simeria, component Part of the IV Pan - European Corridor for the Trains Circulation with maximum speed of 160 km/h"
Section 2 :km 614-Gurasada

Project 9i 35311.1

PT

Denumire desen / Drawing name:

Portals

Scara / Scale	Cod desen / Drawing Code	Nr / No
1:50/25/10	CS 3	CS 3